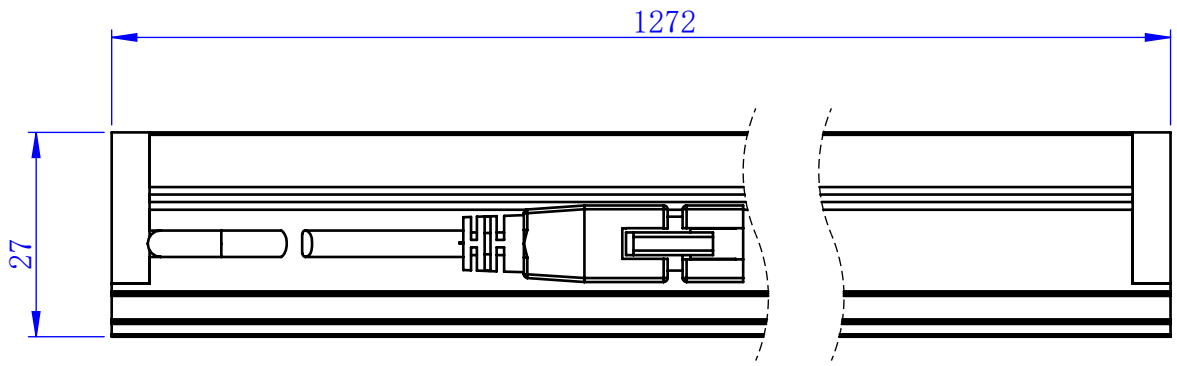
1272
27

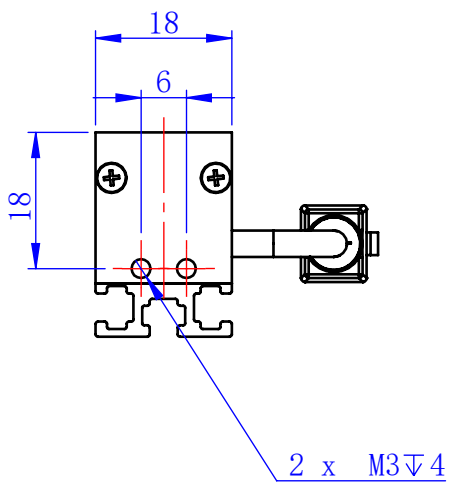
18
6
18
2 x M3↧4

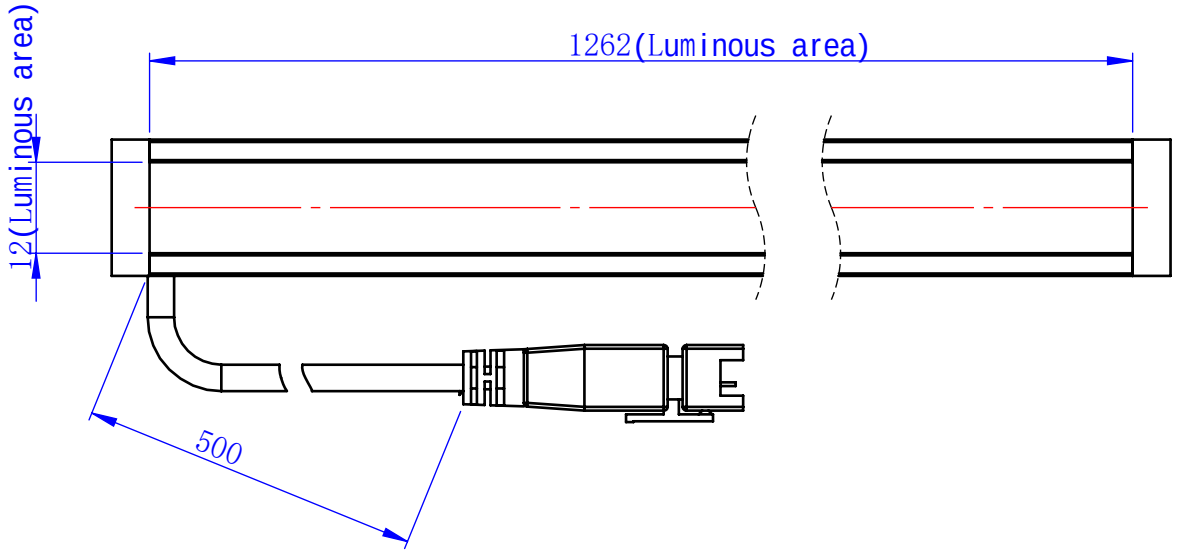
1262(Luminous area)
12(Luminous area)
500